24in LUGGAGE COVER

Front

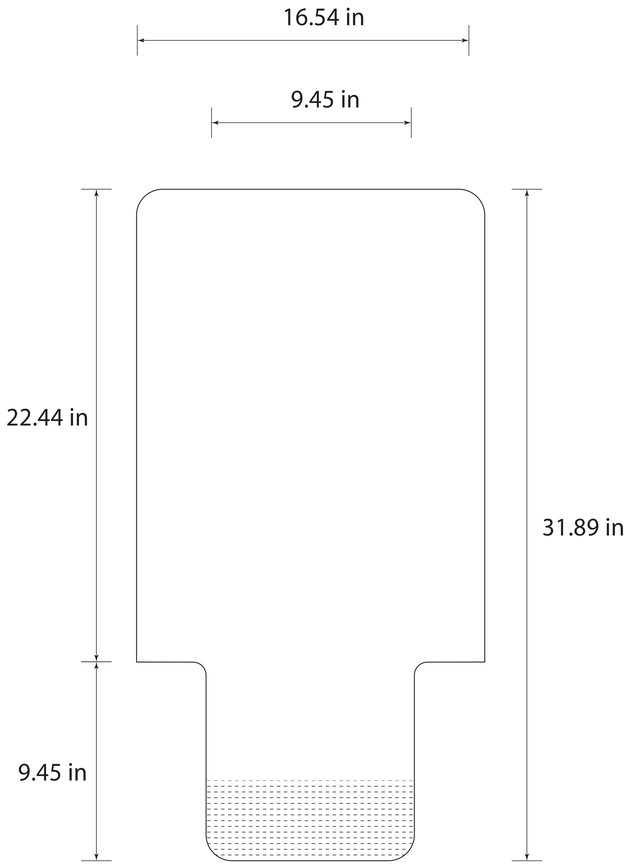

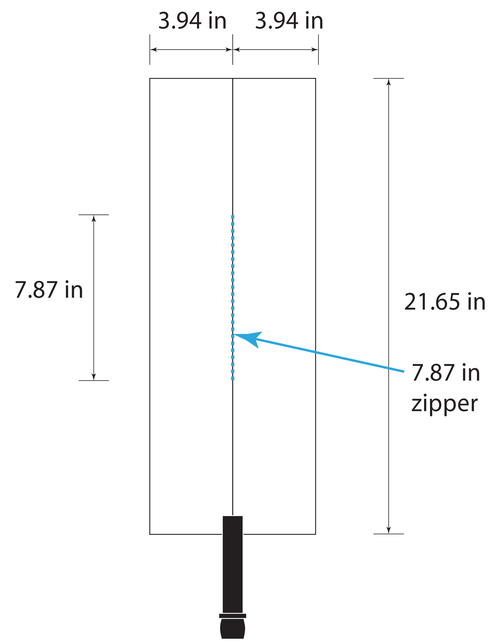

Back

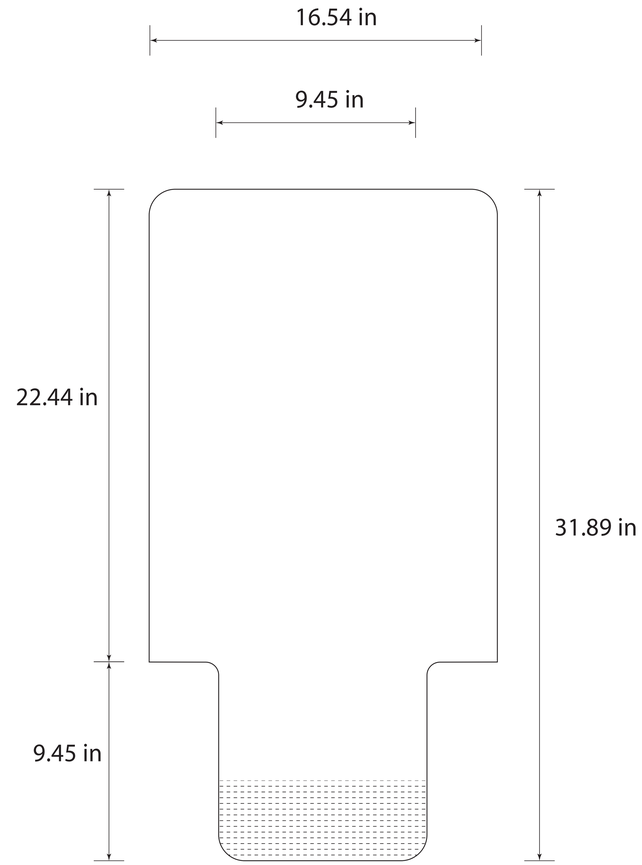

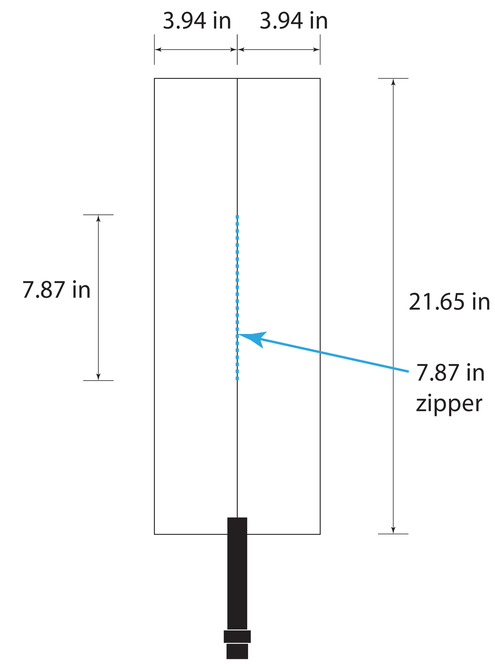

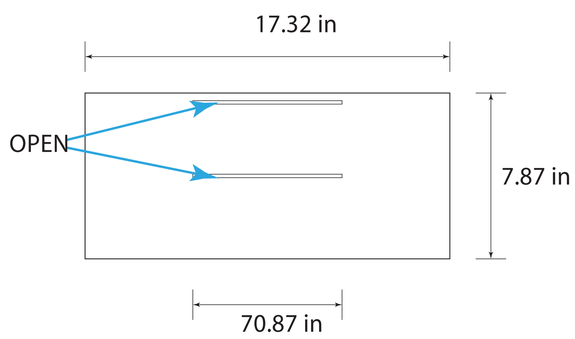

FOR BEST RESULTS, design your artwork using this template in Illustrator
Save file as AI or PDF with layers.

If using Photoshop, make sure that all sizes are correct as
Photoshop may distort and resize template. Save at a minimum 100 DPI.